1-Channel Analog Input Module for Resistor Bridges (Strain Gauge)

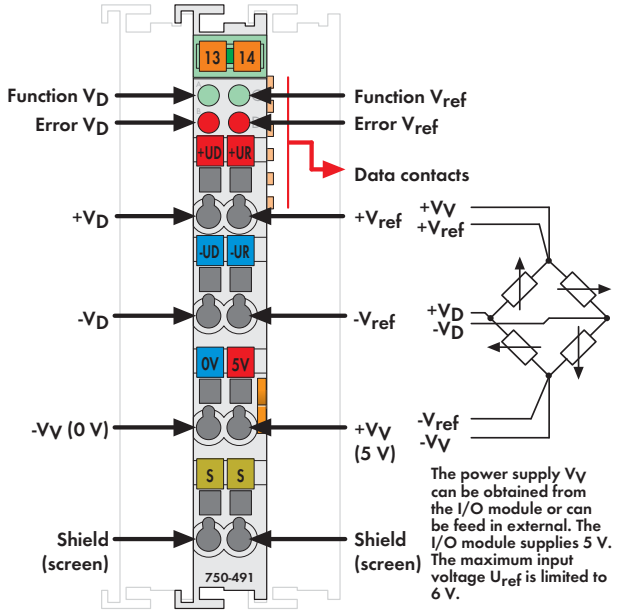

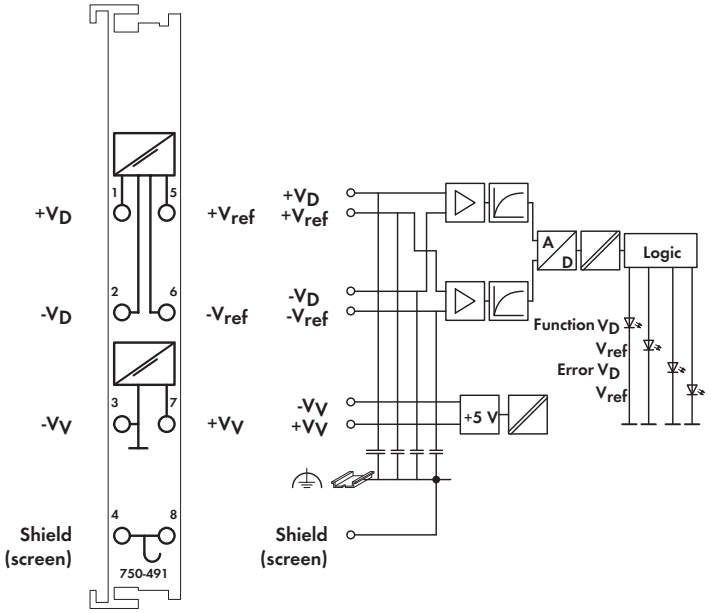

Delivered without miniature WSB markers

The analog input module enables the direct connection of a resistor measurement bridge. The bridge voltage V_D and supply voltage V_{ref} of the bridge are digitized with a resolution of 16 bits.

The input channels for the resistor bridge are available as two 16 bit values for further processing. The result of measurement can be calculated by the formula: Measured value = V_D/V_{ref}.

Field and system levels are electrically isolated.

Description	Item No.	Pack. Unit
1AI for Resistor Bridges	**750-491**	1
1AI for Resistor Bridges / 125ms	**750-491/000-001**	1
Conversion time 125 ms, Filter 200 Hz		

Accessories		Item No.	Pack. Unit
Miniature WSB Quick marking system			
	plain	**248-501**	5
	with marking	see Section 11	

Approvals	
Conformity marking	CE
Korea Certification	

Technical Data	
Number of inputs	2, for one resistor bridge
Power supply	via system voltage DC/DC
Current consumption typ. (internal)	65 mA
Signal voltage V_D	-15mV ... +15mV
Signal voltage V_{ref}	+2V ... +6V
Internal resistance	> 200 kΩ (V_{ref}), > 1 MΩ (V_D)
Voltage supply Vv	5 V DC, 20 mA
Resolution	16 bits
Conversion time	500 ms
Measuring error	V_D: ± 30 µV; V_{ref}: ± 10 mV
Filter	50 Hz
Isolation	500 V system/supply
Bit width	2 x 16 bits data
	2 x 8 bits control/status (optional)
Wire connection	CAGE CLAMP®
Cross sections	0.08 mm² ... 2.5 mm² / AWG 28 ... 14
Strip lengths	8 ... 9 mm / 0.33 in
Width	12 mm
Weight	60 g
EMC immunity of interference	acc. to EN 61000-6-2
EMC emission of interference	acc. to EN 61000-6-4